Xnergy

Autonomous Power Technologies

ORIGIN FOR (SG) WESTON ROBOT

Application Note

BEAB6BA- Control and Monitor Your Charger

Version: 1.07

Date: Nov 2022

Abstract

Xnergy BE series wireless charging charges electrical driven applications through the medium of air without physical contact. The charger is designed with universal purpose in mind, so wide-range robotics applications with different battery types can be charged.

For ease of integration to robots, user is free to use Modbus RTU, CANOpen, or general-purpose IO to monitor/ control charger.

Table of Contents

1. Introduction 3
2. Communication port 3
3. Operation Mode 6
4. Modbus RTU 7
5. User Configuration Mode 9
6. CANopen 11
7. General Purpose IO 13
8. Charging profile setting 14
9. Summary 16
10. Applicable Firmware revision 16
11. Revision History 17
12. Important Notice and Disclaimer 0

List of Figures

Figure 1: Modbus RTU connection to XDM™ 3
Figure 2: CANopen connection in the robots 3
Figure 3: Communication Ports 4
Figure 4: Daisy chain connection for two chargers (a) and three chargers in parallel (b) 5
Figure 5: Operation Mode 6
Figure 6: Example of Modbus command to enable charger 8
Figure 7: Timing diagram for charger enable using IO pin 13
Figure 8: Constant current constant voltage (CCCV) charging profile 14

ORIGIN FOR (SG) WESTON ROBOT

Copyright © Xnergy Autonomous Power Technologies Pte Ltd.

List of Tables

Table 1: Communication Interface definition 4
Table 2: Absolute Maximum Ratings for Communication Ports 4
Table 3: Recommended Operating Conditions for Communication Ports 5
Table 4: Charger LED status 6
Table 5: Modbus RTU specification 7
Table 6: Modbus RTU Parameter 7
Table 7: Error code description 9
Table 8: Additional Modbus parameter for user configuration 10
Table 9: CANopen Message Format 11
Table 10: Examples of CANopen command (robot to charger) 11
Table 11: Example of CANopen response (charger to robot) 12

ORIGIN FOR (SG) WESTON ROBOT

Copyright © Xnergy Autonomous Power Technologies Pte Ltd.

1. Introduction

Xnergy wireless charger supports several communication protocols for easy integration and user convenience. The supported communication protocols are Modbus, CANopen/CANbus, and general-purpose IO.

Charger information such as battery voltage, output current, and firmware revision can be monitored and configured by using Xnergy Device Monitor (XDM™) through Modbus RTU (based on RS485). In addition, XDM™ can also configure parameters such as constant voltage, constant current, and cut-off voltage setting in user-config mode. Users can also control the Xnergy charger through Modbus RTU without using XDM™ by using their own controller if the protocol is followed.

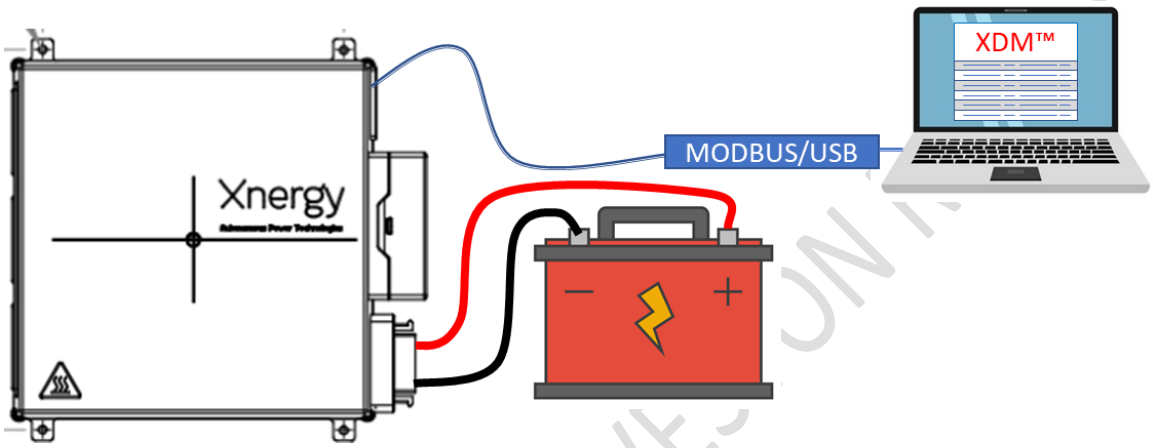

Figure 1: Modbus RTU connection to XDM™

CANopen/CANbus protocol is supported. It is widely adopted in robotics and electric vehicle applications for easy integration. Through CANopen, robots can send charging command as well as monitor the charger. It provides seamless integration to robots that already utilise CANopen.

Another means of supported communication protocol is general purpose IO pin. The charger can be enabled or disabled by sending a signal to the pin. Robots can monitor charger status through status pin.

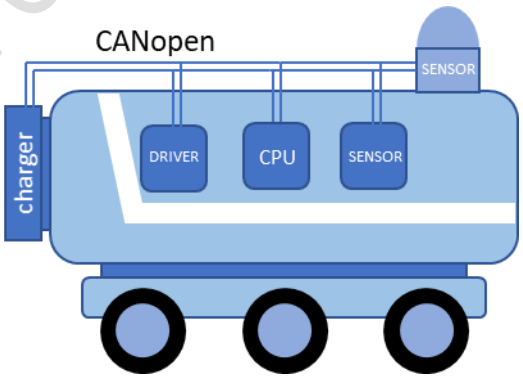

Figure 2: CANopen connection in the robots

2. Communication port

Xnergy wireless charger has two types of termination. One termination is for electrical power interface where battery is connected. The other termination consists of two communication ports, i.e. Port A and Port B shown in Figure 3.

Copyright © Xnergy Autonomous Power Technologies Pte Ltd.

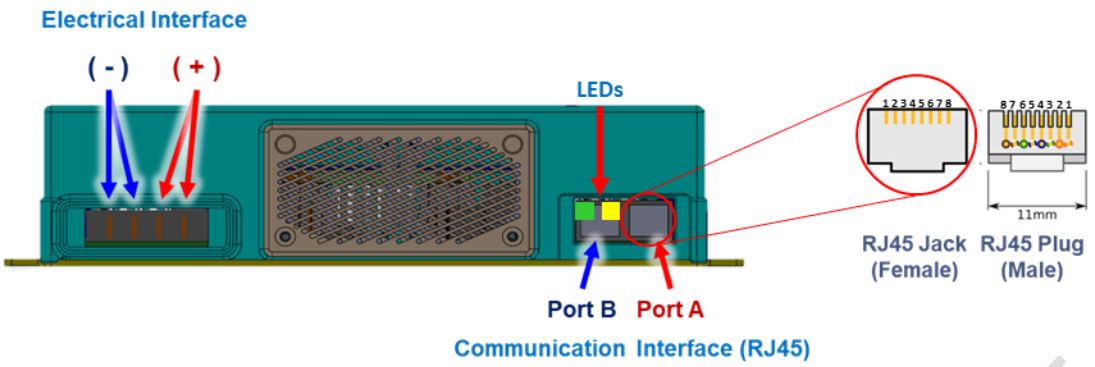

Figure 3: Communication Ports

Each communication port has 8 pins. The ports definition for Port A and B are shown in Table 1.

Table 1: Communication Interface definition

PORT A*			PORT B*	
Pin NO.	Name	Description	Name	Description
1	RS485A	Modbus RTU RS485A	CHARGER_EN	Charger enable pin
2	RS485B	Modbus RTU RS485B	CHARGER_ST	Charger status pin
3	CANH	CAN Bus High	CANH	CAN Bus High
4	CANL	CAN Bus Low	CANL	CAN Bus Low
5	Reserved	Xnergy use only Please left open	Reserved	Xnergy use only Please left open
6	Aux Power Input	Optional, if main power is not always on, please use this pin to power RCU	Aux Power Input	Optional, if main power is not always on, please use this pin to power RCU
7	Reserved	Xnergy use only Please left open	Reserved	Xnergy use only Please left open
8	GND	RCU Ground	GND	RCU Ground

**Disclaimer: Please use specific RJ45 cables that come inside the package or that is suggested by Xnergy. Any other RJ45 cables should be avoided.*

Note: The RS485/CAN/GPIO is not isolated. They reference to the same GND as the battery connector. Please connect the GND from PORT A or PORT B to your device if they are used. Failure to connect GND at PORT A/PORT B may result in high common mode voltage and damage the port.

Table 2: Absolute Maximum Ratings for Communication Ports

Pin NO	Name	Description	MIN	MAX	UNIT
PORT A/B 6	Aux Power Input	Power for control circuit (Optional)	-0.3	100	V
PORT A 1,2	RS485 bus voltage	A-B	-70	30	V
PORT A/B 3,4	CAN bus voltage	H-L	-58	58	V
PORT B 1	CHARGER_EN	Input voltage	-20	20	V
PORT B 2	CHARGER_ST	Input voltage (Open drain)	-0.8	60	V
		Input voltage (Pull up to 5V)	-0.8	5	V
		Input voltage (Pull up to 12V)	-0.8	12	V

ORIGIN FOR LOG WESTON ROBOT

Copyright © Xnergy Autonomous Power Technologies Pte Ltd.

Note: All voltages are referred to GND pin., CHARGER_ST by default is open drain, please contact Xnergy if pull up to 5V or 12V is needed.

Table 3: Recommended Operating Conditions for Communication Ports

Pin NO	Name	Description	MIN	NOM	MAX	UNIT
PORT A/B 6	Aux Power Input	Power for control circuit (Optional)	15		60	V
PORT A 1,2	RS485 bus voltage	A-B	±1	±7	±12	V
PORT A/B 3,4	CAN bus voltage	H-L	±1	±7	±30	V
PORT B 1	CHARGER_EN	VL	0	0	1	V
		VH	3	5	12	V
PORTB 2	CHARGER_ST	Output current		1	4	mA
		Output voltage (Open drain)	-	-	-	V
		Output voltage (Pull up to 5V)	4.8	5	5.2	V
		Output voltage (Pull up to 12V)	11.8	12	12.2	V

Note: All voltages are referenced to GND pin.

When parallel operation is required, charger's communication ports should be connected in daisy-chain as shown in Figure 4. Between the chargers, it uses CAN cable to connect **NOT** RS485 cable. Please contact our customer service to provide the cables. The parallel operation supports two or three devices in parallel. More detailed information for parallel operation will be covered in *BEA6D2E_parallel_operation*.

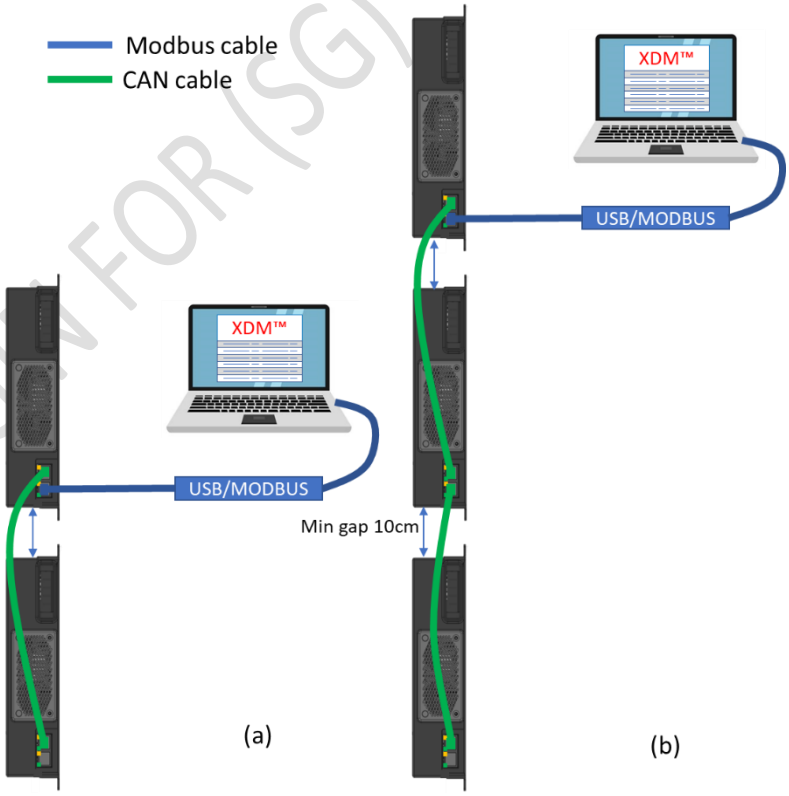

Figure 4: Daisy chain connection for two chargers (a) and three chargers in parallel (b)

ORIGIN FOR (SG) WESTON ROBOT

Copyright © Xnergy Autonomous Power Technologies Pte Ltd.

The charger is equipped with two LEDs. User can monitor the state of the charger by observing LEDs as described in Table 4.

Table 4: Charger LED status

Green LED	Yellow LED	Device State
Slow blink	OFF	Idle. Wait to charge.
OFF	Fast blink	Discovery state (looking for nearest transmitter) in normal mode
ON	Slow blink	Coupling estimation, to detect gap distance between TXP and RCU.
ON	OFF	Charging state.
Fast blink	Fast blink	Error state.

Slow blink and fast blink have period of 500ms and 100ms, respectively.

3. Operation Mode

There are three operation modes of the charger. By default, User will get the charger in Normal mode. Normal mode can be detected by Slow blink on green LED and yellow LED is OFF during idle. User can perform wireless power transfer in this mode. User can change settings in user config mode as shown in Table 8. Password is needed to enter User config mode and set force mode to 4. Green LED is OFF and Yellow LED is blinking fast indicates user config mode. Please be aware that charger is **NOT** able to perform wireless power transfer in user config mode. After configurating, rewrite-config-flash bit must be set to 1 to save the new configuration values into flash. If not, new configurations will be lost. User can go back to normal mode by setting Force-mode to 3. Factory mode is not accessible to the user. It is used for Xnergy's engineers during maintenance.

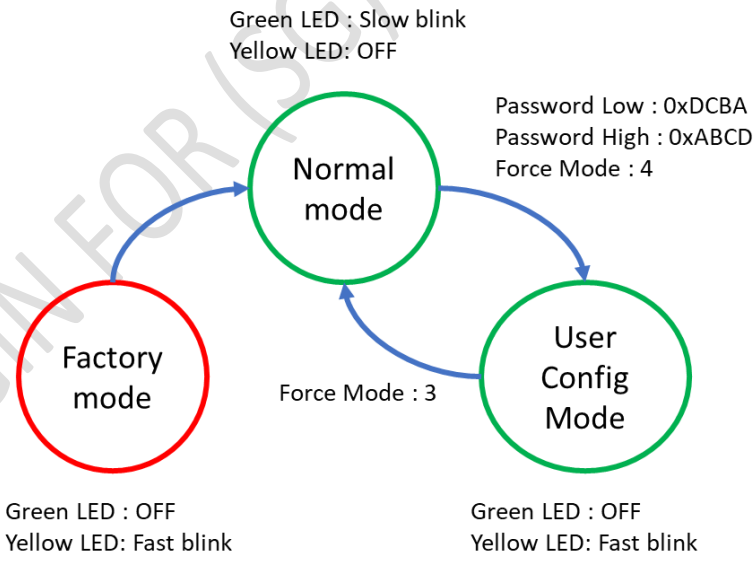

Figure 5: Operation Mode

Please note that changing operation mode cannot be executed during charging. Please ensure that *enable charger* bit should be zero and no current is flowing from the charger, before entering *password* or *change mode*.

ORIGIN FOR (SG) WESTON ROBOT

Copyright © Xnergy Autonomous Power Technologies Pte Ltd.

4. Modbus RTU

Modbus RTU connects the charger to XDM™ where user can monitor and access relevant variables. Modbus RTU use two-wire RS485, physical connection can be found in Figure 1. If RS485 is not available at host device, a RS485 to USB converter can be used. This converter is available from Xnergy. Please contact Xnergy for more information.

Note: The RS485 is not isolated, it is referenced to the same GND as the battery connector. Please connect the GND from PORT A or PORT B to your device if they are used. Fail to connect GND at PORT A/PORT B may result in high common mode voltage and damage to the port.

The specification of the Modbus RTU is shown in Table 5.

Table 5: Modbus RTU specification

Protocol	Modbus RTU (RS485)
Baud rate	9600
Data bits	8
Parity bit	None
Stop bit	1
Unit ID	0x10
Data type conversion	IEEE 754 single precision floating point

Variables that user can access from the charger can be categorised based on their access permission and size into:

1. Coil – 1-bit size with read and write.
2. Discrete input –1-bit size with read only.
3. Holding register – 16-bit size with read and write.
4. Input register – 16-bit size with read only.

Details can be found in Table 6 below.

Table 6: Modbus RTU Parameter

Function	Data type	Access	Modbus Type	Modbus Address	Description
Enable Charging	Bool	Read/Write	Coil	0	ON(0xFF00): start charging OFF(0x0000): stop charging
RCU ID Low	Uint16	Read Only	Input register	149	Low significant part of 32-bit RCU ID
RCU ID High	Uint16	Read Only	Input register	148	High significant part of 32-bit RCU ID
Firmware Version Number Low	Uint16	Read Only	Input register	98	Low significant part of 32-bit Firmware revision
Firmware Version Number High	Uint16	Read Only	Input register	99	High significant part of 32-bit Firmware revision
Runtime voltage setting	Uint16	Read/Write	Holding register	8	Constant voltage setting in Q128 that can be modified during charging. E.g. 5120 = 40V *128

ORIGIN FOR (SG) WESTON ROBOT

Copyright © Xnergy Autonomous Power Technologies Pte Ltd.

Runtime current setting	Uint16	Read/Write	Holding register	9	Constant current setting in Q128 that can be modified during charging. E.g. 1280 = 10A*128
RCU temperature	Uint16	Read Only	Input register	37	Real-time Coil temperature in °C
Output current	Uint16	Read Only	Input register	31	ADC value of charging current in Q128. E.g. 1280 = 10A*128
Battery voltage	Uint16	Read Only	Input register	32	ADC value of Battery voltage in Q128. E.g. 5120 = 40V *128
Main_pre_state	Uint16	Read Only	Input register	50	State 0: Idle State 5: Charging State 238: Error
Main_state	Uint16	Read Only	Input register	51	
Error Code Low	Uint16	Read Only	Input register	52	Low significant part of 32-bit error code
Error Code High	Uint16	Read Only	Input register	53	High significant part of 32-bit error code
Past error Code Low	Uint16	Read Only	Input register	0	Low significant part of 32-bit shadow error code
Past error Code High	Uint16	Read Only	Input register	1	High significant part of 32-bit shadow error code

Example on how to send data via Modbus RTU to our charger is shown in Figure 6. The signal represents Enable charger ON command from host to the charger. Slave Address is the charger's address (0x10) as shown in Table 5. Function code is "0x05" which means writing to coil register. Data address of enable charger is 0x00. Finally, for coil status 0xFF00 represents ON. User can refer to modbus.org for more detail's description about Modbus protocol.

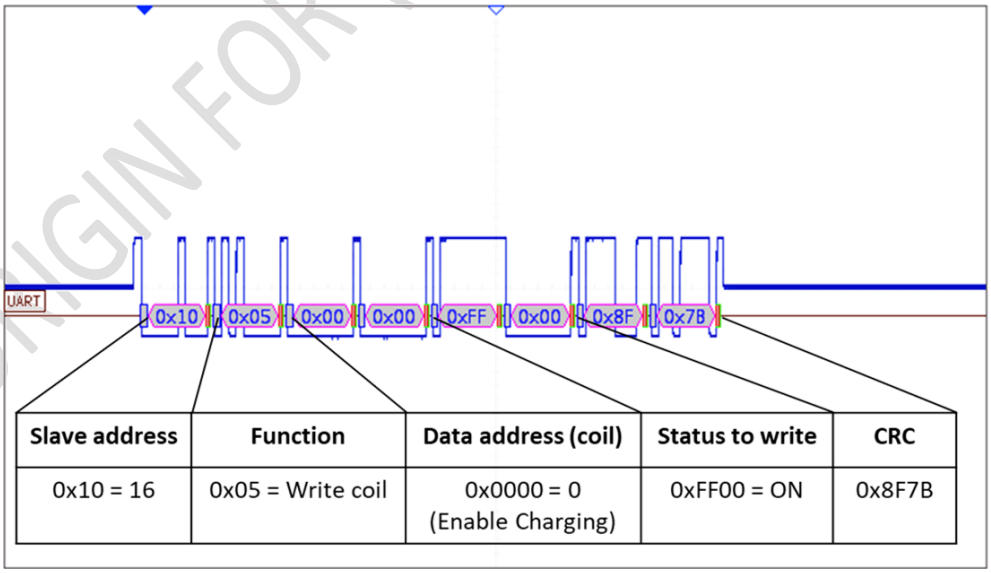

Figure 6: Example of Modbus command to enable charger

Error code is useful to track error that could happen during charging process and find the root cause of it. Error code can be accessed by XDM™.

ORIGIN FOR (SG) WESTON ROBOT

Copyright © Xnergy Autonomous Power Technologies Pte Ltd.

One example by using python can be found from the following link:
https://gitlab.com/zhanglongqi/xnergy-example

Table 7: Error code description

Error Code Hi	Error Code Lo	Description
0x0002	0x0000	Foreign object is detected[1]
0x0001	0x0000	TPU error (Please check TPU error code for the root cause)
0x0000	0x8000	One of fan is stuck
0x0000	0x4000	RCU over temperature detected
0x0000	0x2000	RCU over voltage error (battery is disconnected during charging)
0x0000	0x1000	**Reserved**
0x0000	0x0800	**Reserved**
0x0000	0x0400	**Reserved**
0x0000	0x0200	TPU error during charging
0x0000	0x0100	Communication lost during charging
0x0000	0x0080	Gap distance is too close
0x0000	0x0040	Gap distance is too far
0x0000	0x0020	Pre-run error
0x0000	0x0010	Handshake fail
0x0000	0x0008	Authentication fail during Handsake
0x0000	0x0004	Communication lost after pairing
0x0000	0x0002	TPU RF Pairing timeout
0x0000	0x0001	TIE is not connected properly or firmware update fails

[1]Foreign object detection (FOD) at RCU is optional. If not equipped, foreign object detected error will never be reported.

It is a combination of two 16-bit code. Error code will be appended when more than one error is detected. For example, when error code shows 0x0000-0009, it means there are two errors, which are 0x0000-0008 and 0x0000-0001. The error code will become 0x0000 / 0x0009. Shadow error code is useful to track the previous error code after it is cleared. When source of error is cleared, error code will be cleared with it. Error code is described more details on Table 7.

Firmware version code is 32bits hash code.

5. User Configuration Mode

In user config mode, several parameter setting can be changed to cater user's requirements. To go to user configuration mode, the charger must be put away from the transmitter. The paired transmitter needs to turn-off before proceeding to next step. Password must be key in with 0xDCBA for Low part and 0xABCD for high part. Then, Force mode can be set to 4. User can observe loud fan noise for a short period and LED status will be change to user config mode.

ORIGIN FOR (SG) WESTON ROBOT

Copyright © Xnergy Autonomous Power Technologies Pte Ltd.

Table 8: Additional Modbus parameter for user configuration

Function	Data	Access	Type	Address	Description
Force Mode	Uint16	Read/Write	Holding register	47	3: Normal Mode 4: User config Mode
Password Low	Uint16	Read/Write	Holding register	48	Low significant part of 32-bit Password
Password High	Uint16	Read/Write	Holding register	49	High significant part of 32-bit Password
Rewrite config flash	Uint16	Read/Write	Coil	46	1: Replace old configuration with new ones 0: no effect
Power Limit	Uint16	Read/Write	Holding register	15	Power limit in Watts. Must be lower than 3000.
Voltage setting	Uint16	Read/Write	Holding register	12	Voltage setting for CV stage in Q128. Must be lower than 8320 (65V)
Current setting	Uint16	Read/Write	Holding register	14	Current setting for CC stage in Q128. Must be lower than 11520 (90A)
Cut-off Voltage setting	Uint16	Read Only	Holding register	50	Cut-off voltage setting in Q128. Must be lower than 8320 (65V)
Cut-off current setting	Uint16	Read/Write	Holding register	110	Cut-off current setting in Q128. Must be lower than 1280 (10A)
CANopen enable	Uint16	Read/Write	Coil	22	1: enable CANopen as charging command 0: disable CANopen control
IO control enable	Uint16	Read/Write	Coil	23	1: enable IO as charging command 0: disable IO control

Here, user can change CC CV setting for their battery requirements by changing Current and Voltage setting. The unit for voltage and current is in Q128 which means 128 equals to 1V. Cut-off voltage is the value of battery voltage that will stop the charging. During CV mode, charging current will drop to near 0A. User can use Cut-off current setting to stop the charging when charging current reach below a certain value. It is also expressed in Q128.

CANopen can be used to control the charger by setting up CANopen enable bit to 1. As an alternative, User can choose IO control enable to use IO signal to trigger the charging. After all new configuration is set, rewrite config flash bit needs to be set to 1. Thus, old configuration will be replaced by the new ones. User will observe loud fan noise for a short period. The charger will go back to normal mode by setting up Force-mode to 3. User can confirm that the charger is in normal mode by observing LED status. In normal mode, the charger can operate normally.

ORIGIN FOR (SG) WESTON ROBOT

Copyright © Xnergy Autonomous Power Technologies Pte Ltd.

6. CANopen

CANopen protocol is based on CAN bus 2.0 with standard 11-bit identifier. The default bit rate is set to 250kbps. Termination 120Ω resistor is activated in the charger by default. Both Port A and Port B support CANopen connection. Pin 3 and 4 are for CAN High pin (CANH) and CAN Low pin (CANL) respectively as shown in Table 1.One CANopen packet message contains function command, address, sub-index, and data information. It can be described in Table 9.

Table 9: CANopen Message Format

Byte Number	Data Message Information
Byte 0	Function Command: 2F – Charging Command (write) 2B – Runtime update (write) 40 – Information status (read)
Byte 1	Register Address Lo (Low)
Byte 2	Register Address Hi (High)
Byte 3	Sub-Index
Byte 4	Data Information
Byte 5	Data Information
Byte 6	Data Information
Byte 7	Data Information

Table 10: Examples of CANopen command (robot to charger)

Function	ID	Command	Address		Sub index	Data				Interpretation
		Byte								
		0	1	2	3	4	5	6	7	
Enable Charging	0x60A	2F	00	20	01	**01**	00	00	00	Charging ON
Disable Charging	0x60A	2F	00	20	01	**00**	00	00	00	Charging OFF
Runtime voltage setting (Q128)	0x60A	2B	01	20	01	**00**	**0F**	00	00	**0x0F00** = 3840/128 = 30V
Runtime current setting (Q128)	0x60A	2B	01	20	02	**00**	**05**	00	00	**0x0500** = 1280/128 = 10A
Read Charging Status	0x60A	40	00	20	01	00	00	00	00	

ORIGINAL (SG) WESTON ROBOT

Copyright © Xnergy Autonomous Power Technologies Pte Ltd.

Read Battery voltage	0x60A	40	02	20	06	00	00	00	00	
Read Charging current	0x60A	40	02	20	07	00	00	00	00	
Main pre state	0x60A	40	02	20	09	00	00	00	00	State 0: Idle State 5: Charging State 238: Error
Main state	0x60A	40	02	20	0A	00	00	00	00	
Shadow error code low	0x60A	40	02	20	01	00	00	00	00	Low significant part of 32-bit error code
Shadow error code high	0x60A	40	02	20	02	00	00	00	00	High significant part of 32-bit error code
Runtime error code low	0x60A	40	02	20	03	00	00	00	00	Low significant part of 32-bit shadow error code
Runtime error code high	0x60A	40	02	20	04	00	00	00	00	High significant part of 32-bit shadow error code

Examples of CANopen messages are shown in Table 10. These are the possible messages from robots to the charger. As a response, charger will send a response with ID 0x58A with the same address and sub-index as incoming messages. Data response is stored in byte 4-5. Battery voltage and charging current values are in Q128 which means 3840 in Q128 is equal to 30 in real value. Examples is shown in Table 11.

Table 11: Example of CANopen response (charger to robot)

Function	**ID**	**Command**	**Address**		**Sub index**	**Data**				**Interpretation**
		Byte								
		0	**1**	**2**	**3**	**4**	**5**	**6**	**7**	
Enable Charging	0x58A	60	00	20	01	**00**	00	00	00	Charging ON
Disable Charging	0x58A	60	00	20	01	**00**	00	00	00	Charging OFF
Runtime voltage setting (Q128)	0x58A	60	01	20	01	00	00	00	00	
Runtime current setting (Q128)	0x58A	60	01	20	02	00	00	00	00	

ONLY FOR (SG) WESTON ROBOT

Copyright © Xnergy Autonomous Power Technologies Pte Ltd.

Read Charging Status	0x58A	4F	00	20	01	**01**	00	00	00	Charging ON
Read Battery voltage	0x58A	4B	02	20	06	**00**	**0F**	00	00	0x0F00 = 3840/128 = 30V
Read charging current	0x58A	4B	02	20	07	**00**	**05**	00	00	0x0500 = 1280/128 = 10A
Main pre state	0x58A	4B	02	20	09	**05**	00	00	00	State 0: Idle State 5: Charging State 238: Error
Main state	0x58A	4B	02	20	0A	**EE**	00	00	00	
Shadow error code low	0x58A	4B	02	20	01	00	**00**	00	00	Error code = 0x100000 (NTC temp error)
Shadow error code high	0x58A	4B	02	20	02	10	00	00	00	
Runtime error code low	0x58A	4B	02	20	03	00	80	00	00	Error code = 0x8000 (Fan stuck error)
Runtime error code high	0x58A	4B	02	20	04	00	00	00	00	

7. General Purpose IO

General purpose IO is another way to control the charger. The GPIO signal must be within the permissible voltage range of 0 V to 5 V. For physical connection, three pins can be used in PORT B. CHARGER_EN is used to enable or disable the charger. It is pulled up to 5V internally, so by default, and it is HIGH. To enable the charger, set this pin to LOW or connect it to GND (pin 8). To disable the charger, set this pin to HIGH or simply leave it not connected. There is a time gap between the charger enable signal and charging current ramp-up. The time gap represents a handshake between TPU and RCU that typically lasts for t_1 = 1.4 seconds.

CHARGER_ST shows the status of the charger. It is pulled up to 5V internally. So, by default, this pin's status is HIGH. During charging, CHARGER_ST will give a LOW pulse. If charging is finished, CHARGER_ST will keep low for a period of t_2 = 2 second which is time needed for the charger to go back to *Idle*. Figure 7 shows the timing diagram when general purpose IO is used to control the charger.

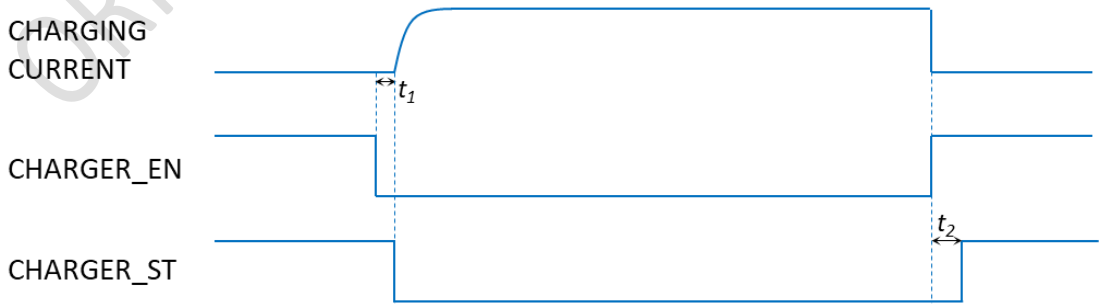

Figure 7: Timing diagram for charger enable using IO pin

ORIGIN FOR (C) WESTON ROBOT

Copyright © Xnergy Autonomous Power Technologies Pte Ltd.

8. Charging profile setting

By default, Xnergy wireless charger uses constant current-constant voltage (CCCV) as charging profile. as shown by Figure 8, the charging process is started with constant current until battery voltage reaches voltage limit in which constant voltage state is executed.

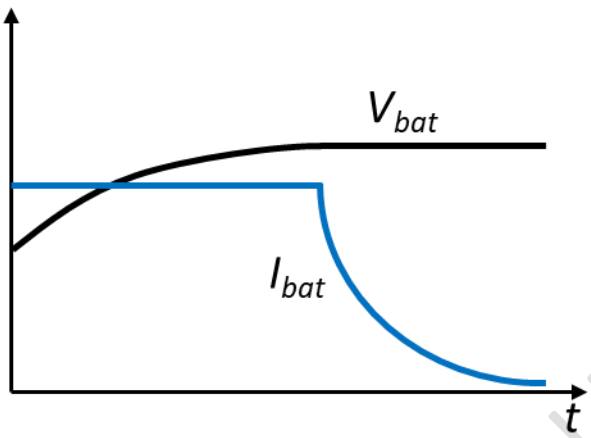

Figure 8: Constant current constant voltage (CCCV) charging profile

User can utilise Modbus to configure CCCV parameter based on Table 8. Current setting (holding register address number 14) represents constant current parameter in Q128 value, for example 1280 is equal to 10A. Whereas, voltage setting (holding register address number 12) represents constant voltage parameter in Q128 value, for example 3480 is equal to 30V. Current setting and voltage setting are stored in non-volatile memory inside the charger that can only be changed in user configuration mode. When the charging is initiated, Voltage and Current setting will be loaded into volatile memory as runtime voltage setting and current setting.

During charging, both constant current and constant voltage parameter can be change temporarily by using runtime current setting and runtime voltage setting, respectively. Runtime current and voltage setting can be modified through Modbus as shown by Table 6. CANopen is also able to modify runtime current and voltage setting based on Table 10. Runtime current and voltage setting are represented in Q128 value as well.

ORIGIN FOR (SG) WESTON ROBOT

Copyright © Xnergy Autonomous Power Technologies Pte Ltd.

9. Flow chart on Controlling RCU

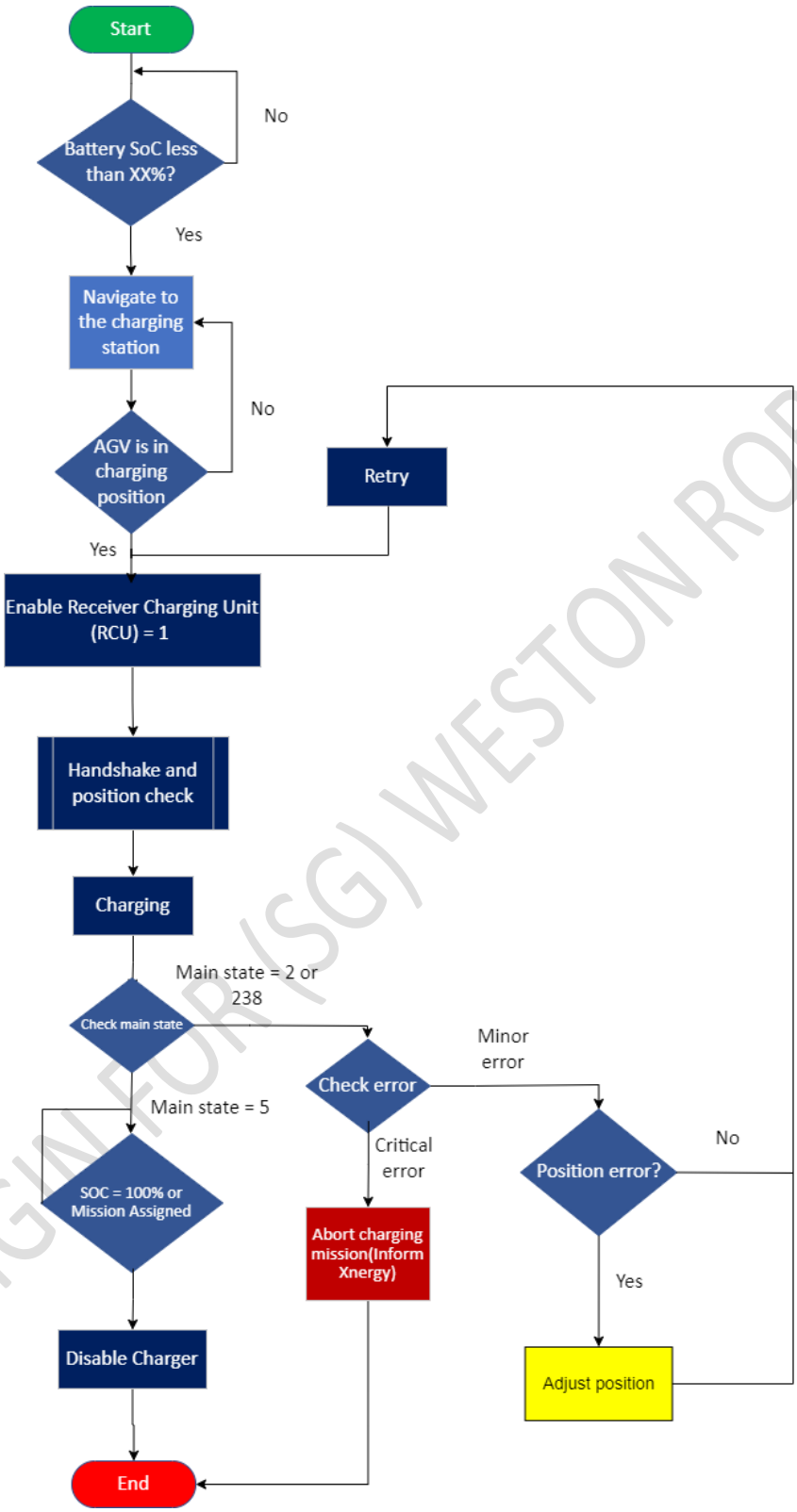

ORIGIN FOR (SG) WESTON ROBOT

Position error：0x40, 0x80, 0x10000

Non-critical error：0x1, 0x2, 0x4, 0x8, 0x10, 0x20, 0x100, 0x200, 0x400, 0x800, 0x1000

Critical error： 0x2000, 0x4000, 0x8000, 0x20000

Copyright © Xnergy Autonomous Power Technologies Pte Ltd.

The basic flowchart, as illustrated above, is to allow users to control Xnergy Receiver Charging Unit (RCU) before wireless charging operation begins or when an error is alarmed during the wireless charging operation.

It is recommended to have the robot monitor both the battery data (SoC, cell voltage, cell temperature and warning error) and Xnergy RCU.

If the robot detects the battery below a certain SoC threshold (for example, 88%) and if the robot does not have any mission, robots may travel back to Xnergy Transmitter Charging Station. Once the robot has parked at the charging station, the robot may send a charging command to RCU, and Xnergy RCU will start to perform handshake and safety checks. Once successful, wireless charging operation begins.

If errors are detected during handshake or charging, errors will indicate the issues encountered. For example, 0x40 and 0x80 mean RCU is too far or too near Transmitter Pad; it is recommended for the robot to adjust its position again. For other errors, the robot may retry or even stop and abort wireless charging to inform Xnergy.

Once the robot detects SoC equals 100% or receive any new mission, the robot must send a disable charging command to stop wireless charging operation before moving off.

10. Summary

Xnergy wireless charger is equipped with communication protocols of Modbus RTU, CANopen, and GPIO. Thus, User can control and monitor charger. By following this guideline, user can integrate the charger to the robots without hassle.

11. Applicable Firmware revision

List the supported firmware revision of this document, other firmware revision please refer to corresponding documentation.

Firmware Revision	Firmware Version Number Low	Firmware Version Number High
V1.10	0x9FD4	0xED09
V1.11	0x48F8	0xC9A6
V1.12	0x70CB	0xC002
V1.20	0xB40D	0xE331
V1.21	0x5E58	0x6611
V1.22	0x3504	0x1FAA
V1.23	0xF737	0xDEB7
V1.24	0x690B	0xE20F
V1.25	0x18C4	0x693E
V2.0.1	0x50F0	0xB9F7
V2.0.2	0x9968	0xE506
V2.0.3	0x0FDD	0x7284
V2.1.0	0x9AD2	0xE4FA
V2.1.1	0x0DDB	0x460A
V2.2.0	0x92BD	0x1896
V2.3.0	0x78AB	0x626A
V2.4.0	0x0BE9	0xEB06

ORIGIN FOR (SG) WESTON ROBOT

Copyright © Xnergy Autonomous Power Technologies Pte Ltd.

12. Revision History

Version Number	Date issued	Author	Update information
V1.0	2020.10.15	Luiz Rizki Ramelan	First published version
V1.01	2020.11.20	Luiz Rizki Ramelan	Address and Gain update
V1.02	2020.12.03	Luiz Rizki Ramelan	Update information on CANopen and GPIO
V1.03	2021.03.02	Luiz Rizki Ramelan	Modbus info use Q128, CAN data is in byte 4&5
V1.04	2021.03.12	Luiz Rizki Ramelan	Update charging profile setting using CANopen
V1.05	2021.11.8	Luiz Rizki Ramelan	Update CAN voltage and current gain
V1.06	2022.06.03	Sin Shi Kang	Added Main state and error code commands for RS485 and CANopen
V1.07	2022.11.18	Sin Shi Kang	Modified RCU ID on Modbus RS485 protocol. Added flowchart on controlling RCU

ORIGIN FOR (SG) WESTON ROBOT

Copyright © Xnergy Autonomous Power Technologies Pte Ltd.

13. Important Notice and Disclaimer

XNERGY PROVIDES TECHNICAL DATA (INCLUDING DATASHEETS), DESIGN RESOURCES (INCLUDING REFERENCE DESIGNS), APPLICATION OR OTHER DESIGN ADVICE, SAFETY INFORMATION, AND OTHER RESOURCES "AS IS" AND WITH ALL FAULTS, AND DISCLAIMS ALL WARRANTIES, EXPRESS AND IMPLIED, INCLUDING WITHOUT LIMITATION ANY IMPLIED WARRANTIES OF MERCHANTABILITY, FITNESS FOR A PARTICULAR PURPOSE OR NON-INFRINGEMENT OF THIRD-PARTY INTELLECTUAL PROPERTY RIGHTS.

These resources are intended for skilled engineers working with XNERGY products. You are solely responsible for (1) selecting the appropriate XNERGY products for your application, (2) designing, validating, and testing your application, and (3) ensuring your application meets applicable standards, and any other safety, security, or other requirements. These resources are subject to change without notice. XNERGY grants you permission to use these resources only for development of an application that uses the XNERGY products described in the resource. Other reproduction and display of these resources is prohibited. No license is granted to any other XNERGY intellectual property right or to any third-party intellectual property right. XNERGY disclaims responsibility for, and you will fully indemnify XNERGY and its representatives against, any claims, damages, costs, losses, and liabilities arising out of your use of these resources. XNERGY's products are provided subject to XNERGY's Terms of Sale or other applicable terms provided in conjunction with such XNERGY products. XNERGY's provision of these resources does not expand or otherwise alter XNERGY's applicable warranties or warranty disclaimers for XNERGY products.

Mailing Address: Xnergy Autonomous Power Technologies Pte Ltd., 2 Clean Tech Loop, #04-09, Singapore 637144
Copyright © 2020, Xnergy Autonomous Power Technologies Pte Ltd.

ORIGIN FOR (SG) WESTON ROBOT